De Dietrich
LE CONFORT DURABLE®

Unités extérieures

AWHP...

Schémas électriques + Switchs

AWHP 4 MR
PUHZ-SW40VHA

SYMBOL	NAME	SYMBOL	NAME	SYMBOL	NAME
TB1	Terminal Block <Power Supply, Indoor/Outdoor>	P. B.	Power Circuit Board	SW5	Switch <Function Switch, Model Select>
MC	Motor for Compressor	R, S	Connection Terminal <L/N-Phase>	SW6	Switch <Model Select>
MF1	Fan Motor	U, V, W	Connection Terminal <U/V/W-Phase>	SW7	Switch <Function Switch>
21S4	Solenoid Valve (Four-Way Valve)	IPM	Power Module	SW8	Switch <Function Switch>
63H	High Pressure Switch	PFC	Converter	SW9	Switch <Function Switch>
63HS	High Pressure Sensor	CB1, CB2, CB3	Main Smoothing Capacitor	SWP	Switch <Pump Down>
TH3	Thermistor <Liquid>	N. F.	Noise Filter Circuit Board	CN31	Connector <Emergency Operation>
TH4	Thermistor <Discharge>	LI, LO	Connection Terminal <L-Phase>	CNDM	Connector <Connection for Option>
TH6	Thermistor <2-Phase Pipe>	NI, NO	Connection Terminal <N-Phase>	CN51	Connector <Connection for Option>
TH7	Thermistor <Ambient>	EI, E2, E3	Connection Terminal <Ground>	SV1/CH	Connector <Connection for Option>
TH8	Thermistor <Heat Sink>	52C	52C Relay	SS	Connector <Connection for Option>
TH34	Thermistor <Comp. Surface>	C. B.	Controller Circuit Board	CNM	Connector <Connection for Option>
LEV-A, LEV-B	Linear Expansion Valve	SW1	Switch <Manual Defrost, Defect History, Record Reset, Refrigerant Address>	LED1, LED2	LED<Operation Inspection Indicators>
ACL	Reactor			F1, F2, F3, F4	Fuse <T6.3AL250V>
CY1, CY2	Capacitor	SW4	Switch <Test Operation>	X51, X52, X54	Relay

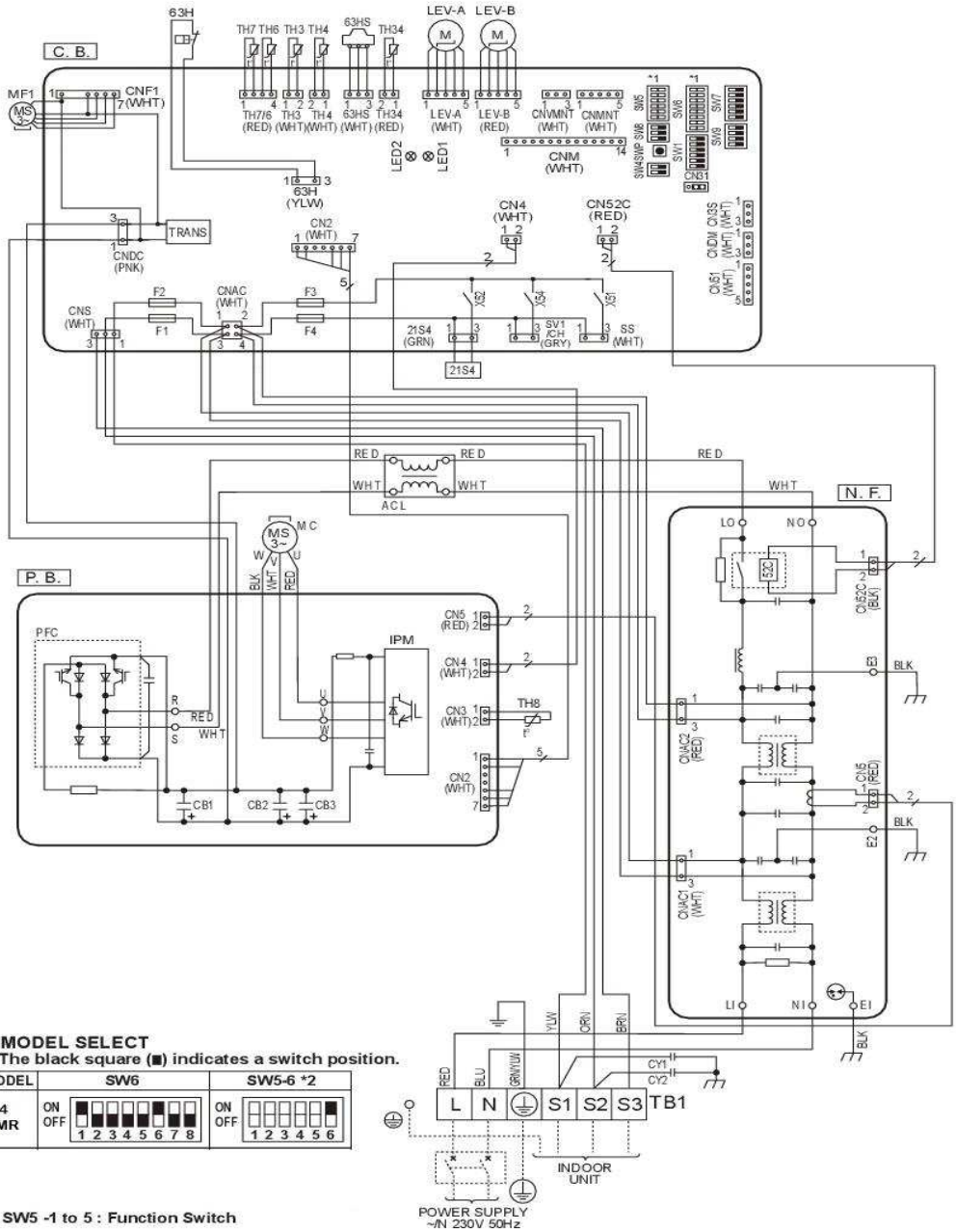

***1 MODEL SELECT**
The black square (■) indicates a switch position.

MODEL	SW6	SW5-6 *2
4 MR	ON OFF 1 2 3 4 5 6 7 8	ON OFF 1 2 3 4 5 6

***2 SW5 -1 to 5 : Function Switch**

AWHP 4.5 MR

SUHZ-SW45VA.TH
SUHZ-SW45VAR1.TH
SUHZ-SW45VAR2.TH

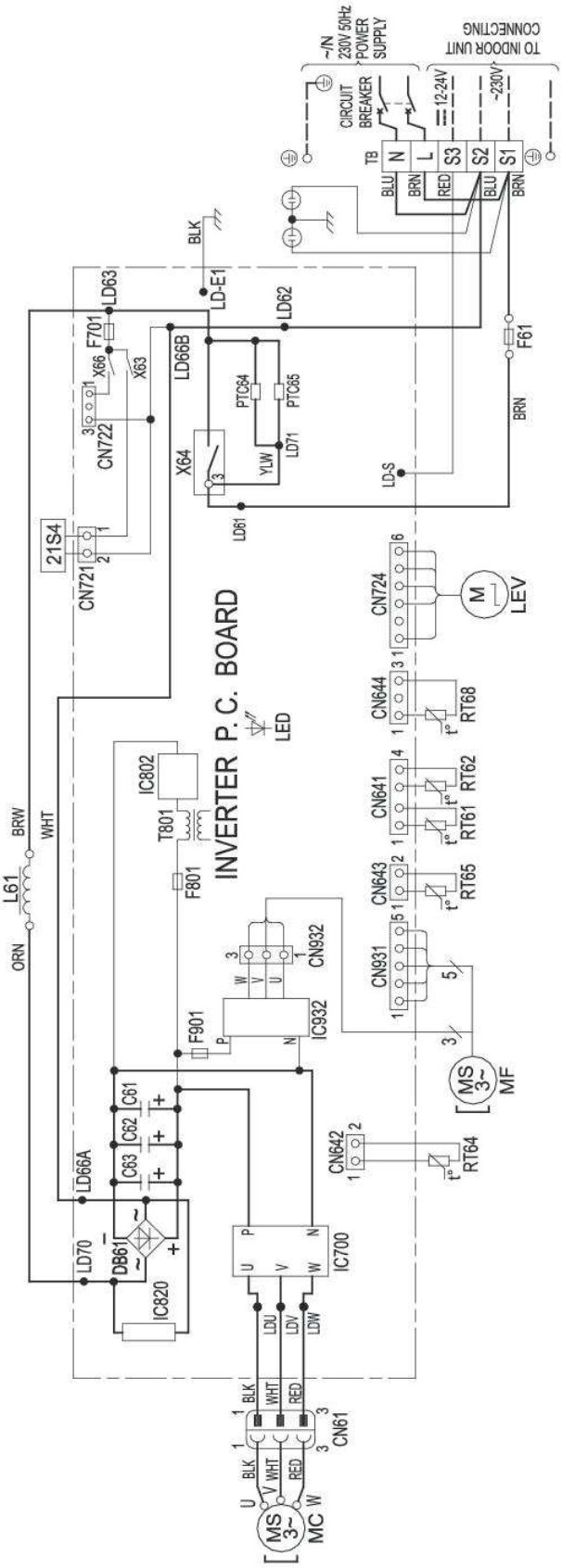

NOTES:
1. About the indoor side electric wiring refer to the indoor unit electric wiring diagram for servicing.
2. Use copper conductors only. (For field wiring).

SYMBOL	NAME	SYMBOL	NAME	SYMBOL	NAME
C61, C62, C63	SMOOTHING CAPACITOR	L61	REACTOR	RT68	OUTDOOR HEAT EXCHANGER TEMP. THERMISTOR
DB61	DIODE MODULE	MC	COMPRESSOR	TB	TERMINAL BLOCK
F61	FUSE (T20AL250V)	MF	FAN MOTOR	T801	TRANSFORMER
F701, F801, F901	FUSE (T3. 15AL250V)	PTC64, PTC65	CIRCUIT PROTECTION	X63, X64	RELAY
IC700, IC820, IC932	POWER MODULE	RT61	DEFROST THERMISTOR	X66	
IC802	POWER DEVICE	RT62	DISCHARGE TEMP. THERMISTOR	21S4	REVERSING VALVE COIL
LED	LED	RT64	FIN TEMP. THERMISTOR		
LEV	EXPANSION VALVE COIL	RT65	AMBIENT TEMP. THERMISTOR		

AWHP 6 MR
PUHZ-RP50VHA

SYMBOL	NAME
TB1	Terminal Block<Power Supply, Indoor/Outdoor>
MC	Motor for Compressor
MF1	Fan Motor
21S4	Solenoid Valve (Four-Way Valve)
63H	High Pressure Switch
TH3, TH33	Thermistor<Outdoor Pipe>
TH4	Thermistor<Discharge>
TH6	Thermistor<Outdoor 2-Phase Pipe>
TH7	Thermistor<Outdoor>
TH8	Thermistor<Heat Sink>
TH32	Thermistor<Shell>
LEV-A, LEV-B	Electronic Expansion Valve
ACL	Reactor
CY1,CY2	Reactor
P.B.	Power Circuit Board
TABR/S	Connection Terminal<L/N-Phase>
TABU/V/W	Connection Terminal<U/V/W-Phase>

SYMBOL	NAME
IPM	Power Module
PFC	Converter
CB1~CB3	Main Smoothing Capacitor
N.F.	Noise Filter Circuit Board
LI/LO	Connection Terminal<L-Phase>
NI/NO	Connection Terminal<N-Phase>
E1,E2,E3	Connection Terminal<Ground>
52C	52C Relay
C.B.	Controller Circuit Board
SW1	Switch<Forced Defrost, Defect History Record Reset, Refrigerant Address>
SW4	Switch<Test Operation>
SW5	Switch<Function Switch>
SW6	Switch<Model Select>
SW7	Switch<Function Setup>
SW8	Switch<Function Setup>
SW9	Switch

SYMBOL	NAME
LED1,LED2	LED <Operation Inspection Indicators>
F1~4	Fuse<T6.3AL250V>
SWP	Switch<Pump Down>
CN31	Connector<Emergency Operation>
CN51	Connector<Connection for Option>
SS	Connector<Connection for Option>
CNM	Connector<A-Control Service Inspection Kit>
CNMNT	Connector <Connected to Optional M-NET Adapter Board>
CNVMNT	Connector <Connected to Optional M-NET Adapter Board>
CNDM	Connector < Connected for Option (Contact Input)>
X51,X52	Relay

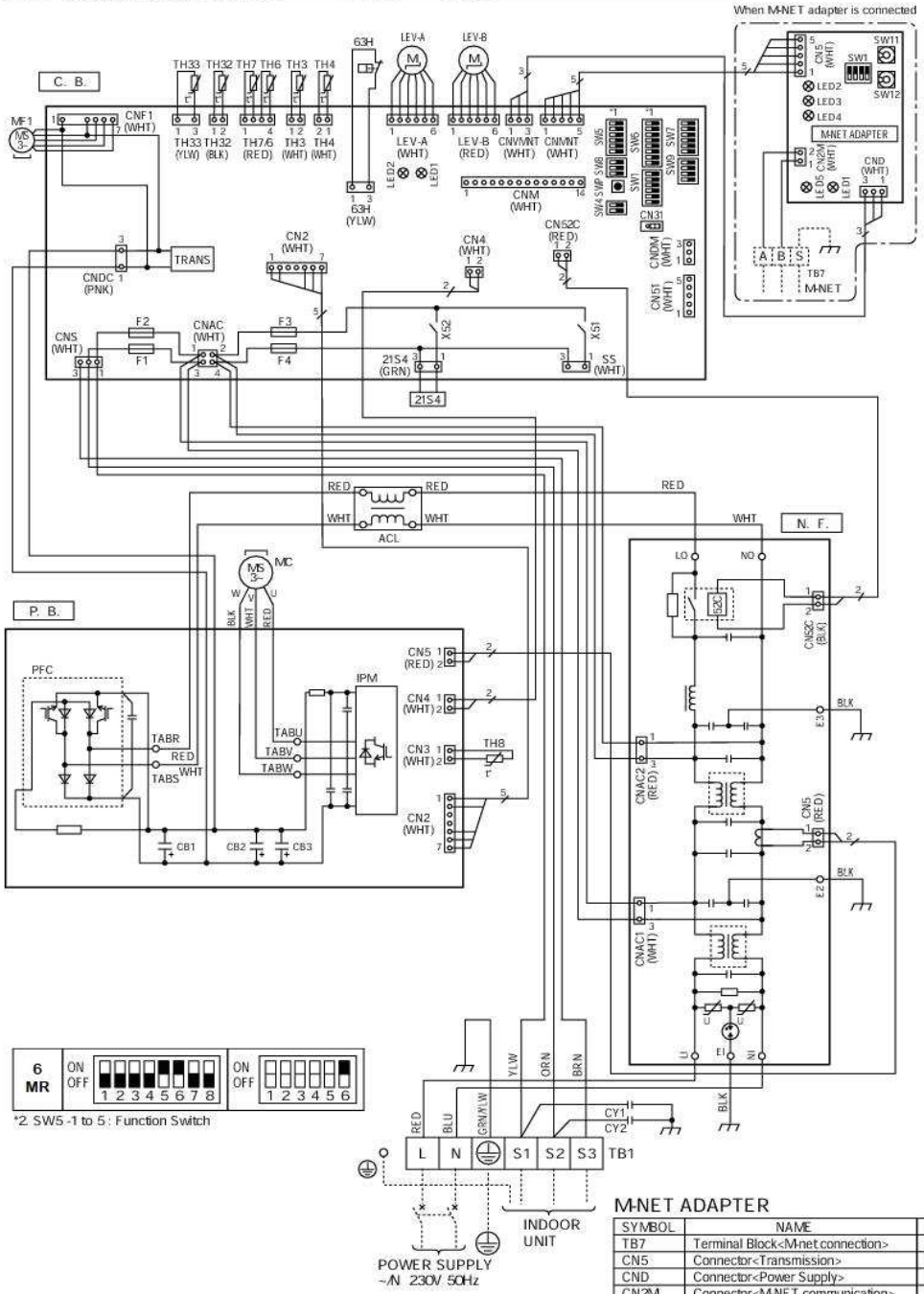

*2. SW5 -1 to 5 : Function Switch

M-NET ADAPTER

SYMBOL	NAME	SYMBOL	NAME
TB7	Terminal Block<M-net connection>	SW12	Switch<Address setting : 10s digit>
CN5	Connector<Transmission>	LED1	LED<Power Supply : DC5V>
CND	Connector<Power Supply>	LED2	LED<Connection to Outdoor Unit>
CN2M	Connector<M-NET communication>	LED3	LED<Transmission : Sending>
SW1	Switch<Status of communication>	LED4	LED<Transmission : Receiving>
SW11	Switch<Address setting : 1s digit>	LED5	LED<Power Supply : DC12V>

AWHP 6 MR - 2
PUHZ-SW50VHA

SYMBOL	NAME	SYMBOL	NAME	SYMBOL	NAME
TB1	Terminal Block <Power Supply, Indoor/Outdoor>	P. B.	Power Circuit Board	SW5	Switch <Function Switch, Model Select>
MC	Motor for Compressor	R, S	Connection Terminal <L/N-Phase>	SW6	Switch <Model Select>
MF1	Fan Motor	U, V, W	Connection Terminal <U/V/W-Phase>	SW7	Switch <Function Switch>
21S4	Solenoid Valve (Four-Way Valve)	IPM	Power Module	SW8	Switch <Function Switch>
63H	High Pressure Switch	PFC	Converter	SW9	Switch <Function Switch>
63HS	High Pressure Sensor	CB1, CB2, CB3	Main Smoothing Capacitor	SWP	Switch <Pump Down>
TH3	Thermistor <Liquid>	N. F.	Noise Filter Circuit Board	CN31	Connector <Emergency Operation>
TH4	Thermistor <Discharge>	LI, LO	Connection Terminal <L-Phase>	CNDM	Connector <Connection for Option>
TH6	Thermistor <2-Phase Pipe>	NI, NO	Connection Terminal <N-Phase>	CN51	Connector <Connection for Option>
TH7	Thermistor <Ambient>	EI, E2, E3	Connection Terminal <Ground>	SV1/CH	Connector <Connection for Option>
TH8	Thermistor <Heat Sink>	52C	52C Relay	SS	Connector <Connection for Option>
TH34	Thermistor <Comp. Surface>	C. B.	Controller Circuit Board	CNM	Connector <Connection for Option>
LEV-A, LEV-B	Linear Expansion Valve	SW1	Switch <Manual Defrost, Defect History, Record Reset, Refrigerant Address>	LED1, LED2	LED<Operation Inspection Indicators>
ACL	Reactor			F1, F2, F3, F4	Fuse <T6.3AL250V>
CY1, CY2	Capacitor	SW4	Switch <Test Operation>	X51, X52, X54	Relay

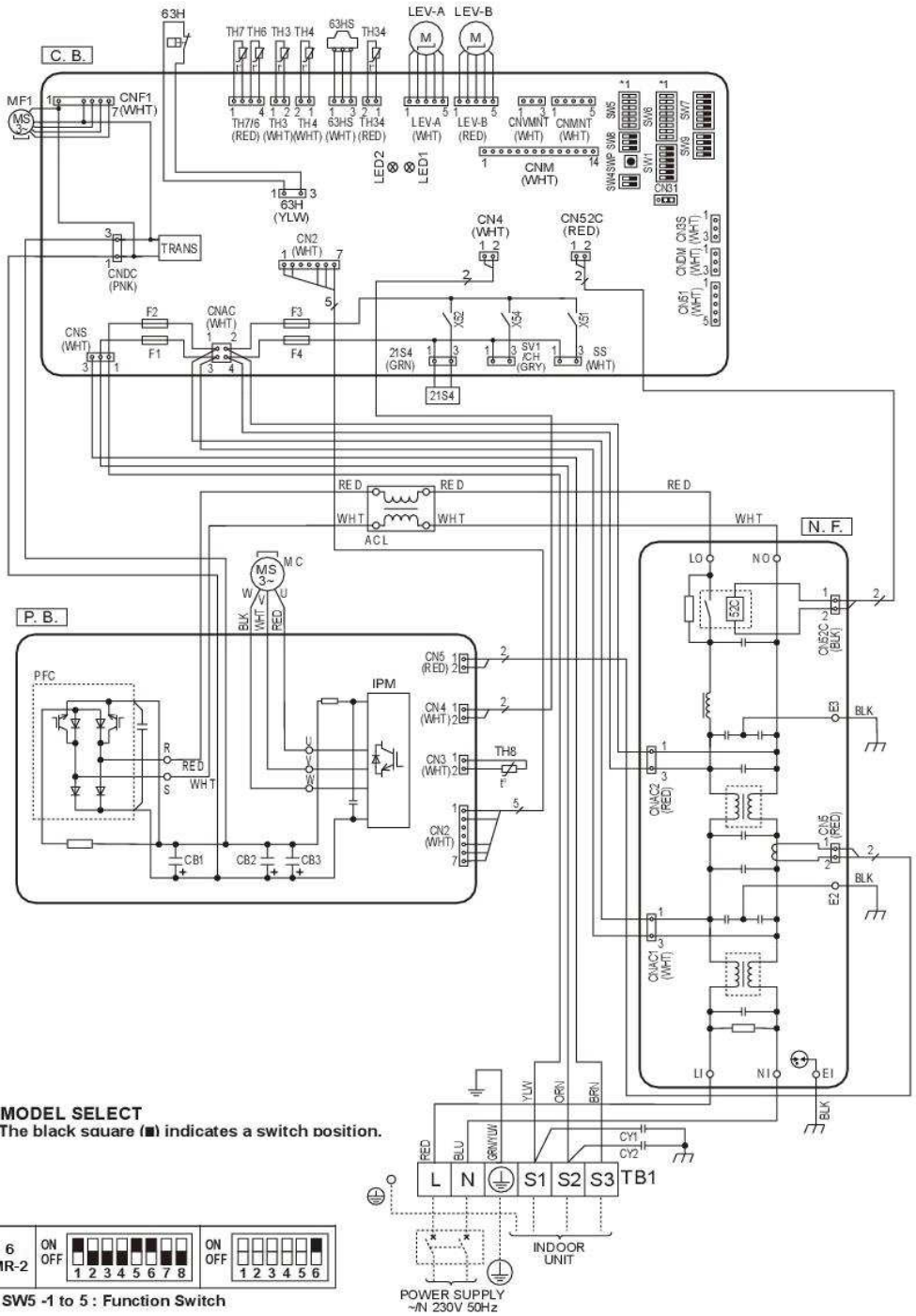

***1 MODEL SELECT**
The black square (■) indicates a switch position.

***2 SW5 -1 to 5 : Function Switch**

AWHP 6 MR - 3
PUHZ-SW50VKA
PUHZ-SW50VKA-BS

SYMBOL	NAME	SYMBOL	NAME
TB1	Terminal Block<Power Supply, Indoor/Outdoor>	C. B.	Controller Circuit Board
MC	Motor for Compressor	F1, F2	Fuse<T10AL250V>
MF1	Fan Motor	F3, F4	Fuse<T3.15AL250V>
21S4	Solenoid Valve (4-Way Valve)	CNDM	Connector<Connection for Option>
63H	High Pressure Switch	CN51	Connector<Connection for Option>
63HS	High Pressure Sensor	S. B.	Switch Board
TH3	Thermistor<Liquid>	SW1	Switch<Manual Defrost, Defect History Record Reset, Refrigerant Address>
TH4	Thermistor<Discharge>	SW4	Switch<Function Switch>
TH6	Thermistor<2-Phase Pipe>	SW5	Switch<Function Switch, Model Select>
TH7	Thermistor<Ambient>	SW6	Switch<Model Select>
TH8	Thermistor<Heat Sink>	SW7	Switch<Function Switch>
TH34	Thermistor<Comp. Surface>	SW8	Switch<Function Switch>
LEV-A, LEV-B	Linear Expansion Valve	SWP	Switch<Pump Down>
ACL	Reactor	CNM	Connector<Connection for Option>

*1 MODEL SELECT
The black square (■) indicates a switch position.

MODEL	SW6	SW5-6 *2
6 MR	ON OFF 1 2 3 4 5 6 7 8	ON OFF 1 2 3 4 5 6

*2 SW5 -1 to 5 : Function Switch

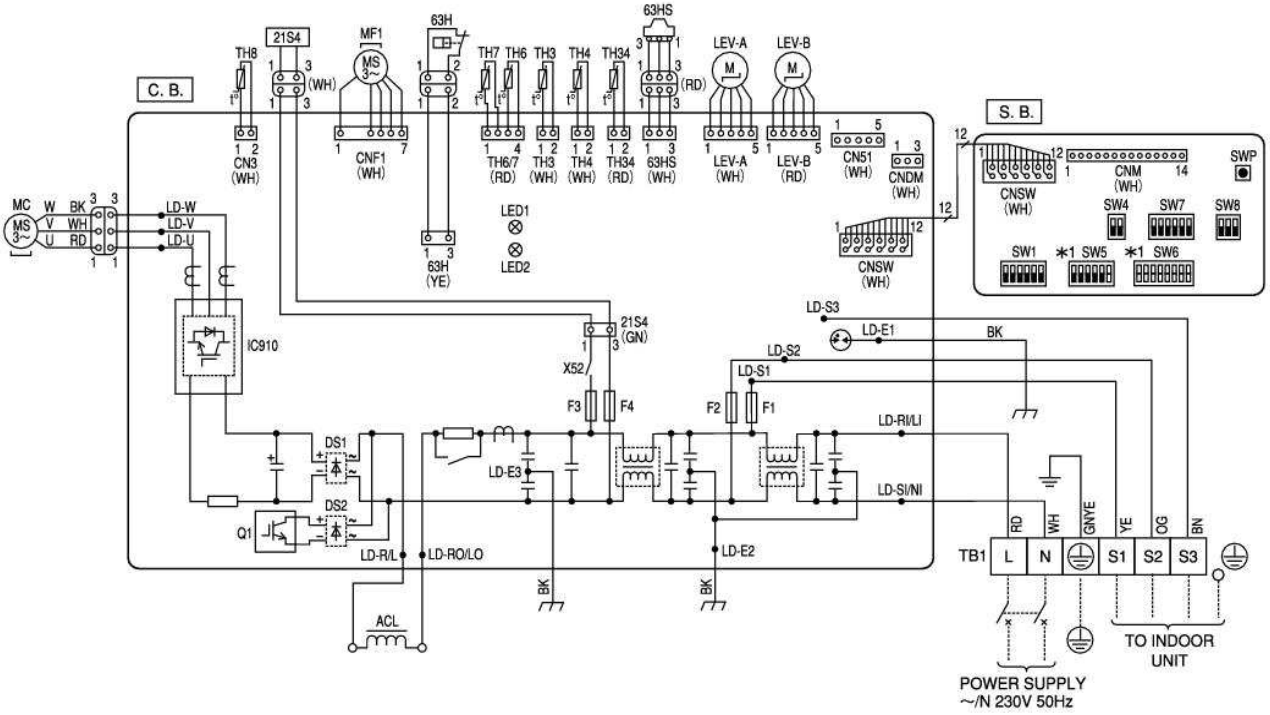

AWHP 8 MR
PUHZ-RP71VHA

SYMBOL	NAME
TB1	Terminal Block (Power Supply, Indoor/Outdoor)
MC	Motor for Compressor
MF1	Fan Motors
21S4	Solenoid Valve (Four-Way Valve)
63H	High Pressure Switch
SV	Solenoid Valve (Bypass Valve)
TH3	Thermistor (Outdoor Pipe)
TH4	Thermistor (Discharge)
TH6	Thermistor (Outdoor 2-Phase Pipe)
TH7	Thermistor (Outdoor)
TH8	Thermistor (Radiator Panel)
LEV(A),LEV(B)	Electronic Expansion Valve
ACL	Reactor
P.B.	Power Circuit Board
R/S	Connection Terminal (L/N-Phase)
U/V/W	Connection Terminal (U/V/W-Phase)
CN2~5	Connector
PFC	Converter
IPM	Inverter
CB1~CB3	Main Smoothing Capacitor

SYMBOL	NAME
N.F.	Noise Filter Circuit Board
LI/LO	Connection Terminal (L-Phase)
NI/NO	Connection Terminal (N-Phase)
E	Connection Terminal (Ground)
CNAC1/2	Connector
CN5	Connector
CN52C	Connector
52C	52C Relay
C.B.	Controller Circuit Board
SW1	Switch (Forced Defrost, Defect History Record Reset, Refrigerant Address)
SW4	Switch (Test Operation)
SW5	Switch (Function Switch)
SW6	Switch (Model Select)
SW7	Switch (Function Setup)
SW8	Switch
SW9	Switch
SW10	Switch (Model Select)
LED1,LED2	Light Emitting Diodes (Operation Inspection Indicators)

SYMBOL	NAME
F1~4	Fuse (6.3 A)
SWP	Switch (Pump Down)
CN31	Connector (Emergency Operation)
CNAC	Connector
CNDC	Connector
CNS	Connector
CNF1	Connector
SS	Connector (Connection for Option)
SV2	Connector
CNM	Connector (A-Control Service Inspection Kit)
CNMNT	Connector (Connected to Optional M-NET Adapter Board)
CNVMNT	Connector (Connected to Optional M-NET Adapter Board)
CNDM	Connector (Connected for Option (Contact Input))
X51,X52,X55	Reray

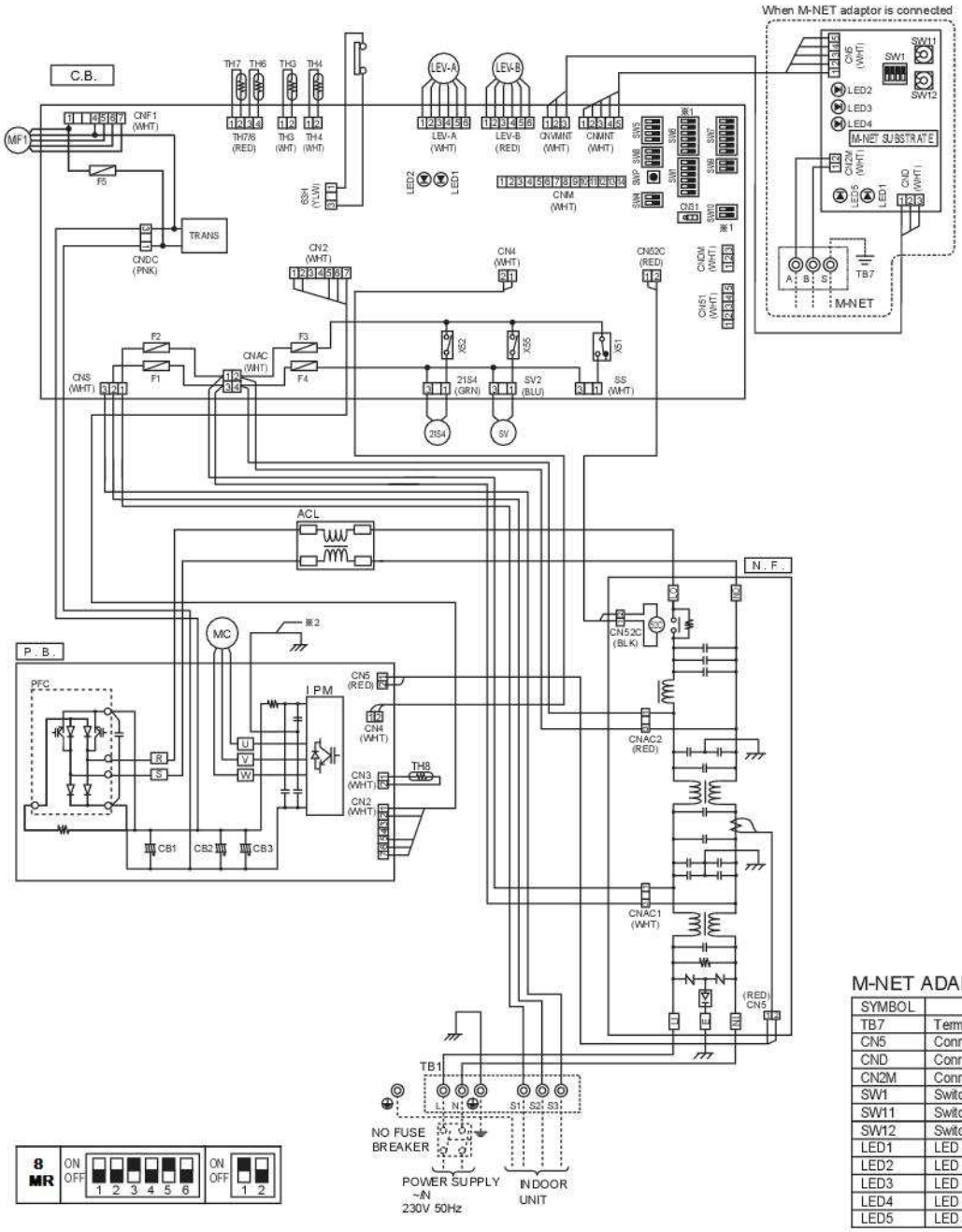

M-NET ADAPTER

SYMBOL	NAME
TB7	Terminal Block (M-net connection)
CN5	Connector (Transmission)
CND	Connector (Power Supply)
CN2M	Connector (M-NET communication)
SW1	Switch (Status of communication)
SW11	Switch (Address setting : 1st digit)
SW12	Switch (Address setting : 2nd digit)
LED1	LED (Power Supply : DC5V)
LED2	LED (Connection to Outdoor Unit)
LED3	LED (Transmission : Sending)
LED4	LED (Transmission : Receiving)
LED5	LED (Power Supply : DC12V)

AWHP 8 MR - 2
PUHZ-SW75VHA

SYMBOL	NAME	SYMBOL	NAME	SYMBOL	NAME
TB1	Terminal Block <Power Supply, Indoor/Outdoor>	P.B.	Power Circuit Board	SW5	Switch <Function Switch, Model Select>
MC	Motor for Compressor	R, S	Connection Terminal <L/N-Phase>	SW6	Switch <Model Select>
MF1	Fan Motor	U, V, W	Connection Terminal <U/V/W-Phase>	SW7	Switch <Function Switch>
21S4	Solenoid Valve (Four-Way Valve)	IPM	Power Module	SW8	Switch <Function Switch>
63H	High Pressure Switch	PFC	Converter	SW9	Switch <Function Switch>
63HS	High Pressure Sensor	CB1, CB2, CB3	Main Smoothing Capacitor	SWP	Switch <Pump Down>
TH3	Thermistor <Liquid>	N.F.	Noise Filter Circuit Board	CN31	Connector <Emergency Operation>
TH4	Thermistor <Discharge>	LI, LO	Connection Terminal <L-Phase>	CNDM	Connector <Connection for Option>
TH6	Thermistor <2-Phase Pipe>	NI, NO	Connection Terminal <N-Phase>	CN51	Connector <Connection for Option>
TH7	Thermistor <Ambient>	EI, E2, E3	Connection Terminal <Ground>	SV1/CH	Connector <Connection for Option>
TH8	Thermistor <Heat Sink>	52C	52C Relay	SS	Connector <Connection for Option>
TH34	Thermistor <Comp. Surface>	C.B.	Controller Circuit Board	CNM	Connector <Connection for Option>
LEV-A, LEV-B	Linear Expansion Valve	SW1	Switch <Manual Defrost, Defect History, Record Reset, Refrigerant Address>	LED1, LED2	LED <Operation Inspection Indicators>
ACL	Reactor			F1, F2, F3, F4	Fuse <T6.3AL250V>
CY1, CY2	Capacitor	SW4	Switch <Test Operation>	X51, X52, X54	Relay

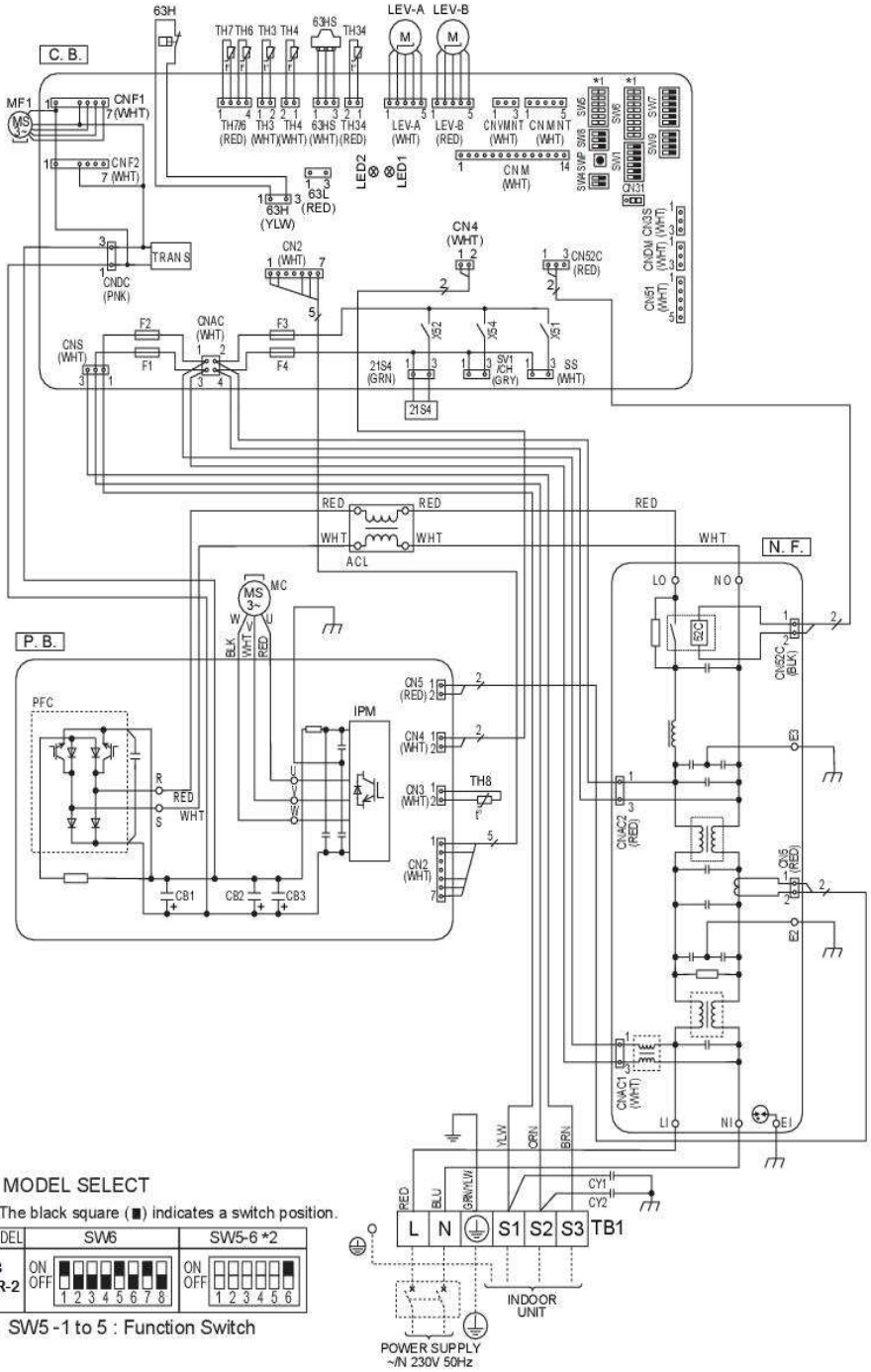

*1 MODEL SELECT

The black square (■) indicates a switch position.

MODEL	SW6	SW5-6 *2
8 MR-2	ON OFF 1 2 3 4 5 6 7 8	ON OFF 1 2 3 4 5 6

*2 SW5 -1 to 5 : Function Switch

AWHP 14 MR PUHZ-RP125VHA2#2 AWHP 16 MR PUHZ-RP140VHA2#2 AWHP 11 MR PUHZ-RP100VHA3#1

SYMBOL	NAME
TB1	Terminal Block <Power Supply, Indoor/Outdoor>
MC	Motor for Compressor
MF1, MF2	Fan Motor
21S4	Solenoid Valve (Four-Way Valve)
63H	High Pressure Switch
SV	Solenoid Valve (Bypass Valve)
TH3, TH33	Thermistor <Outdoor Pipe>
TH4	Thermistor <Discharge>
TH6	Thermistor <Outdoor 2-Phase Pipe>
TH7	Thermistor <Outdoor>
TH8	Thermistor <Heat Sink>
TH32	Thermistor <Shell>
LEV-A, LEV-B	Electronic Expansion Valve
DCL	Reactor
ACTM	Active Filter Module
CB	Main Smoothing Capacitor
CY1,CY2	Capacitor
P.B.	Power Circuit Board
TABU/V/W	Connection Terminal <U/V/W-Phase>
TABS/T	Connection Terminal <L/N-Phase>

SYMBOL	NAME
TABP1/P2/P	Connection Terminal <DC Voltage>
TABN1/N2/N	Connection Terminal <DC Voltage>
DS2, DS3	Diode Bridge
IPM	Power Module
N.F.	Noise Filter Circuit Board
LI / LO	Connection Terminal <L-Phase>
NI / NO	Connection Terminal <N-Phase>
EI, E2	Connection Terminal <Ground>
52C	52C Relay
C.B.	Controller Circuit Board
SW1	Switch <Forced Defrost, Defect History Record Reset, Refrigerant Address>
SW4	Switch <Test Operation>
SW5	Switch <Function Switch>
SW6	Switch <Model Select>
SW7	Switch <Function Setup>
SW8	Switch <Function Setup>
SW9	Switch

SYMBOL	NAME
SWP	Switch <Pump Down>
CN31	Connector <Emergency Operation>
CN51	Connection for Option
SS	Connector <Connection for Option>
CNM	Connector <A-Control Service Inspection Kit>
CNMNT	Connector <Connected to Optional M-NET Adapter Board>
CNVMNT	Connector <Connected to Optional M-NET Adapter Board>
CNDM	Connector < Connected for Option (Contact Input)>
LED1, LED2	Light Emitting Diodes <Operation Inspection Indicators>
F1~F4	Fuse < T6.3AL250V>
X51,X52,X55	Relay

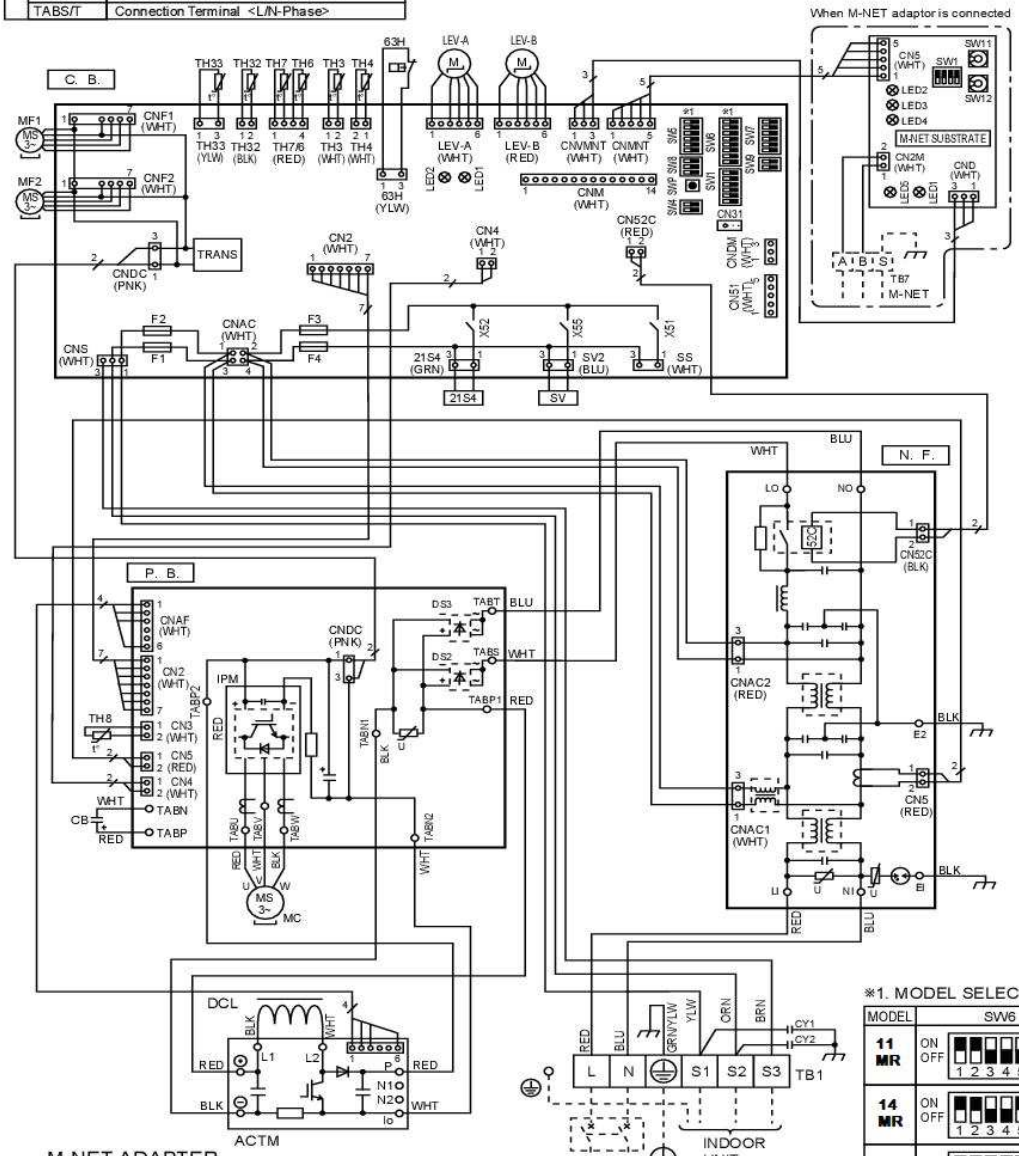

※1. MODEL SELECT

MODEL	SW6	SW5-6 ※2
11 MR	ON OFF 1 2 3 4 5 6 7 8	ON OFF 1 2 3 4 5 6
14 MR	ON OFF 1 2 3 4 5 6 7 8	ON OFF 1 2 3 4 5 6
16 MR	ON OFF 1 2 3 4 5 6 7 8	ON OFF 1 2 3 4 5 6

※2. SW5 -1 to 5 : Function Switch

M-NET ADAPTER

SYMBOL	NAME
TB7	Terminal Block <M-net connection>
CN5	Connector <Transmission>
CND	Connector <Power Supply>
CN2M	Connector <M-NET communication>
SW1	Switch <Status of communication>
SW11	Switch <Address setting>
SW12	Switch <Address setting : 2nd digit>
LED1	LED <Power Supply : DC5V>
LED2	LED <Connection to Outdoor Unit>
LED3	LED <Transmission : Sending>
LED4	LED <Transmission : Receiving>
LED5	LED <Power Supply : DC12V>

AWHP 11 TR AWHP 14 TR AWHP 16 TR

PUHZ-RP100YHA3#1 PUHZ-RP125YHA2#2 PUHZ-RP140YHA2#2

SYMBOL	NAME
TB1	Terminal Block <Power Supply >
TB2	Terminal Block <Indoor/Outdoor >
MC	Motor for Compressor
MF1, MF2	Fan Motor
21S4	Solenoid Valve (Four-Way Valve)
63H	High Pressure Switch
SV	Solenoid Valve (Bypass Valve)
TH3, TH33	Thermistor <Outdoor Pipe>
TH4	Thermistor <Discharge>
TH6	Thermistor <Outdoor 2-Phase Pipe>
TH7	Thermistor <Outdoor>
TH32	Thermistor <Shell>
LEV-A, LEV-B	Electronic Expansion Valve
ACL1~ACL4	Reactor
CB1, CB2	Main Smoothing Capacitor
CK	Capacitor
RS	Rush Current Protect Resistor
P.B.	Power Circuit Board
TB-U/V/W	Connection Terminal <U/V/W-Phase>
TB-L1/L2/L3	Connection Terminal <L1/L2/L3-Power Supply>

SYMBOL	NAME
TB-P2	Connection Terminal
TB-C1	Connection Terminal
TB-N1	Connection Terminal
X52A	52C Relay
N.F.	Noise Filter Circuit Board
LI1/LI2/LI3/NI	Connection Terminal <L1/L2/L3/N-Power Supply>
LO1/LO2/LO3/NO	Connection Terminal <L1/L2/L3/N-Power Supply>
GD1, GD3	Connection Terminal <Ground>
CONV.B.	Converter Circuit Board
L1-A1/IN	Connection Terminal <L1-Power Supply>
L1-A2/OU	Connection Terminal <L1-Power Supply>
L2-A2/OU	Connection Terminal <L2-Power Supply>
L3-A2/OU	Connection Terminal <L3-Power Supply>
N-IN	Connection Terminal
CK-OU	Connection Terminal
C.B.	Controller Circuit Board
SW1	Switch <Forced Defrost, Defect History Record Reset, Refrigerant Adress>
SW4	Switch <Test Operation>
SW5	Switch <Function Switch>

SYMBOL	NAME
SW6	Switch <Model Select>
SW7	Switch <Function Setup>
SW8	Switch <Function Setup>
SW9	Switch
SWP	Switch <Pump Down>
CN31	Connector <Emergency Operation>
LED1,LED2	LED <Operatiion Inspection Indicators>
F1~F4	FUSE <T6.3AL250V>
CNM	Connector <A-Control Service Inspection Kit>
CNMNT	Connector <Connect to Optional M-NET Adapter Board>
CNVMNT	Connector <Connect to Optional M-NET Adapter Board>
CNDM	Connector < Connection for Option(Contact Input)>
CN3S	Connector < Connection for Option>
CN51	Connector < Connection for Option>

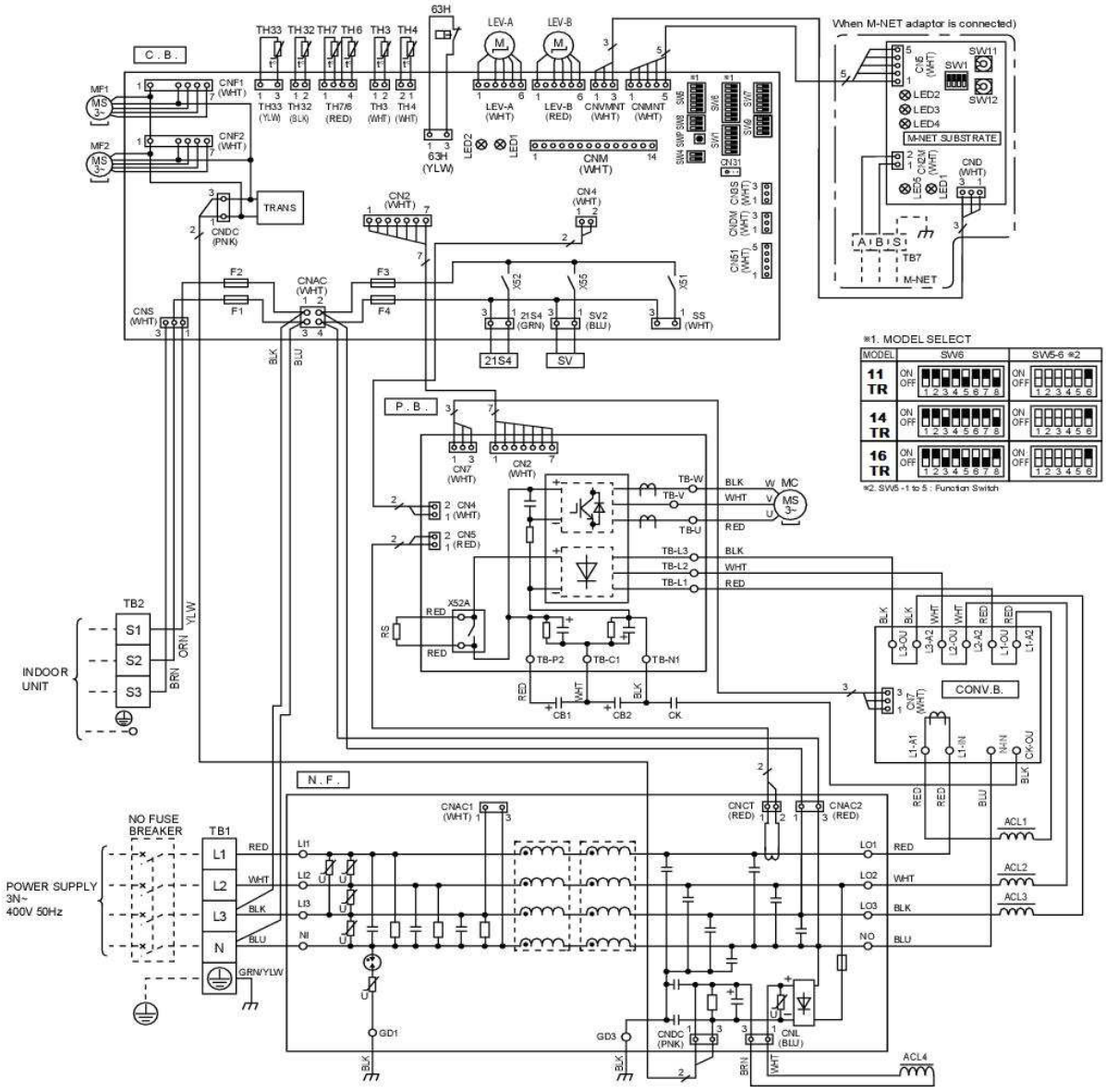

M-NET ADAPTER

TB7	Terminal Block <M-NET connection >	SW12	Switch <Address setting. 2nd digit >
CN5	Connector <Transmission>	LED1	LED <Power Supply: DC5V>
CND	Connector <Power Supply>	LED2	LED <Connection to Outdoor Unit>
CN2M	Connector <M-NET communication>	LED3	LED <Transmission: Sending>
SW1	Switch <Status of communication>	LED4	LED <Transmission: Receiving>
SW11	Switch <Address setting: 1st digit>	LED5	LED <Power Supply: DC12V>

AWHP 11 MR - 2 PUHZ-SW100VHA

AWHP 16 MR - 2 PUHZ-SW120VHA

SYMBOL	NAME
TB1	Terminal Block <Power Supply, Indoor/Outdoor>
MC	Motor for Compressor
MF1, MF2	Fan Motor
21S4	Solenoid Valve (Four-Way Valve)
63H	High Pressure Switch
63L	Low Pressure Switch
63HS	High Pressure Sensor
TH3	Thermistor <Liquid>
TH4	Thermistor <Discharge>
TH6	Thermistor <2-Phase Pipe>
TH7	Thermistor <Ambient>
TH8	Thermistor (internal) <Heat Sink>
TH34	Thermistor <Comp. Surface>
LEV-A, LEV-B	Linear Expansion Valve
DCL	Reactor
CB	Main Smoothing Capacitor
CY1, CY2	Capacitor

SYMBOL	NAME
P. B.	Power Circuit Board
U, V, W	Connection Terminal <U/V/W-Phase>
LI	Connection Terminal <L-Phase>
NI	Connection Terminal <N-Phase>
P2	Connection Terminal
N2	Connection Terminal
DCL1, DCL2	Connection Terminal <Reactor>
IGBT	Power Module
EI, E2, E3, E4	Connection Terminal <Ground>
52C	52C Relay
C. B.	Controller Circuit Board
SW1	Switch <Manual Defrost, Defect History, Record Reset, Refrigerant Address>
SW4	Switch <Test Operation>
SW5	Switch <Function Switch, Model Select>
SW6	Switch <Model Select>

SYMBOL	NAME
SW7	Switch <Function Switch>
SW8	Switch <Function Switch>
SW9	Switch <Function Switch>
SWP	Switch <Pump Down>
CN31	Connector <Emergency Operation>
CNDM	Connector <Connection for Option>
CN51	Connector <Connection for Option>
SV1/CH	Connector <Connection for Option>
SS	Connector <Connection for Option>
CNM	Connector <Connection for Option>
LED1, LED2	LED <Operation Inspection Indicators>
F1, F2, F3, F4	Fuse <T6.3AL250V>
X51, X52, X54	Relay

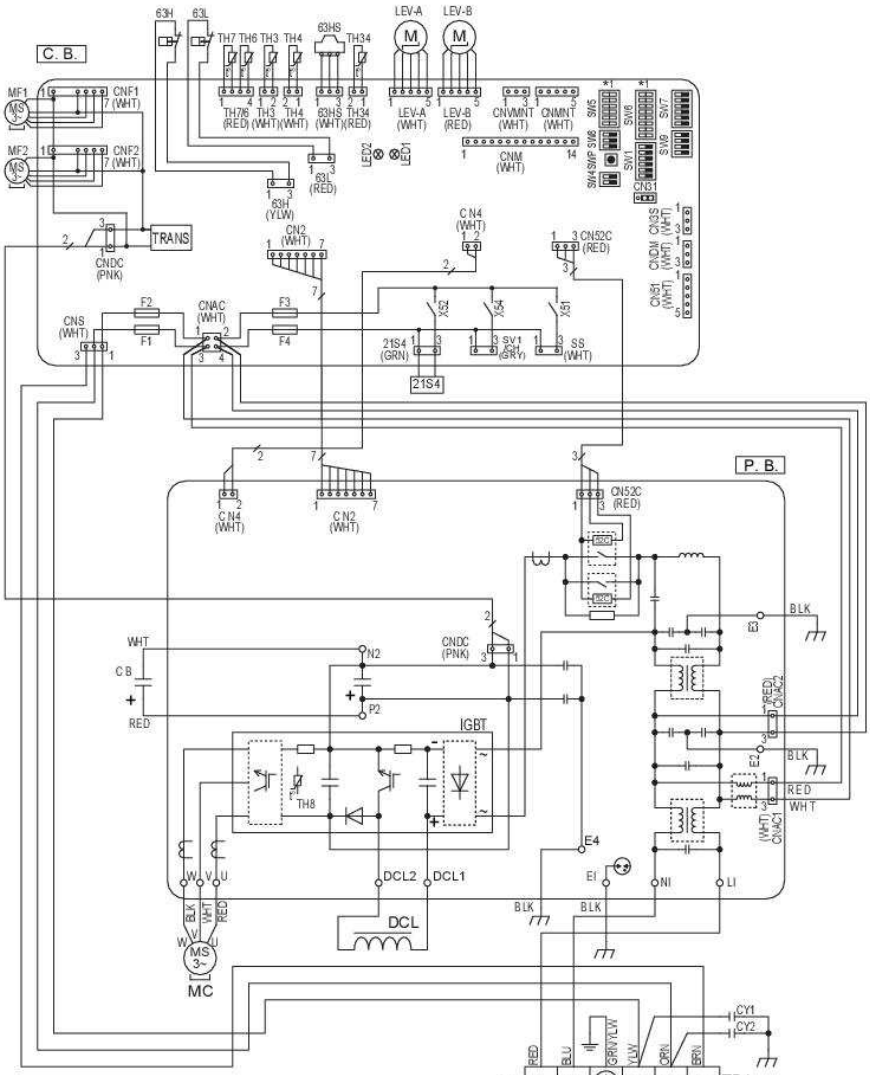

*1 MODEL SELECT

The black square (■) indicates a switch position.

MODEL	SW6	SW5-6 *2
11 MR-2	ON OFF 1 2 3 4 5 6 7 8	ON OFF 1 2 3 4 5 6
16 MR-2	ON OFF 1 2 3 4 5 6 7 8	ON OFF 1 2 3 4 5 6

*2 SW5 -1 to 5 : Function Switch

AWHP 11 TR - 2 AWHP 16 TR - 2
PUHZ-SW100YHA PUHZ-SW120YHA

SYMBOL	NAME
TB1	Terminal Block <Power Supply>
TB2	Terminal Block <Indoor/Outdoor>
MC	Motor for Compressor
MF1, MF2	Fan Motor
21S4	Solenoid Valve (Four-Way Valve)
63H	High Pressure Switch
63L	Low Pressure Switch
63HS	High Pressure Sensor
TH3	Thermistor <Liquid>
TH4	Thermistor <Discharge>
TH6	Thermistor <2-Phase Pipe>
TH7	Thermistor <Ambient>
TH8	Thermistor <Heat Sink>
TH34	Thermistor <Comp. Surface>
LEV-A, LEV-B	Linear Expansion Valve
ACL1, ACL2, ACL3, ACL4	Reactor
CY1, CY2	Capacitor
CK	Capacitor
RS	Rush Current Protect Resistor

SYMBOL	NAME
P. B.	Power Circuit Board
TB-U/V/W	Connection Terminal <U/V/W-Phase>
TB-L1/L2/L3	Connection Terminal <L1/L2/L3-Power Supply>
TB-N	Connection Terminal
X52CA	52C Relay
N. F.	Noise Filter Circuit Board
LI1/LI2/LI3/NI	Connection Terminal <L1/L2/L3/N-Power Supply>
LO1/LO2/LO3/NO	Connection Terminal <L1/L2/L3/N-Power Supply>
GD1, GD3	Connection Terminal <Ground>
CONV. B.	Converter Circuit Board
L1-A1/IN	Connection Terminal <L1-Power Supply>
L1-A2/OU	Connection Terminal <L1-Power Supply>
L2-A2/OU	Connection Terminal <L2-Power Supply>
L3-A2/OU	Connection Terminal <L3-Power Supply>
N-IN	Connection Terminal
CK-OU	Connection Terminal

SYMBOL	NAME
C. B.	Controller Circuit Board
SW1	Switch <Manual Defrost, Defect History, Record Reset, Refrigerant Address>
SW4	Switch <Test Operation>
SW5	Switch <Function Switch, Model Select>
SW6	Switch <Model Select>
SW7	Switch <Function Switch>
SW8	Switch <Function Switch>
SW9	Switch <Function Switch>
SWP	Switch <Pump Down>
CN31	Connector <Emergency Operation>
CNDM	Connector <Connection for Option>
CN51	Connector <Connection for Option>
SV1/CH	Connector <Connection for Option>
SS	Connector <Connection for Option>
CNM	Connector <Connection for Option>
LED1, LED2	LED <Operation Inspection Indicators>
F1, F2, F3, F4	FUSE <T6.3AL250V>
X51, X52, X54	Relay

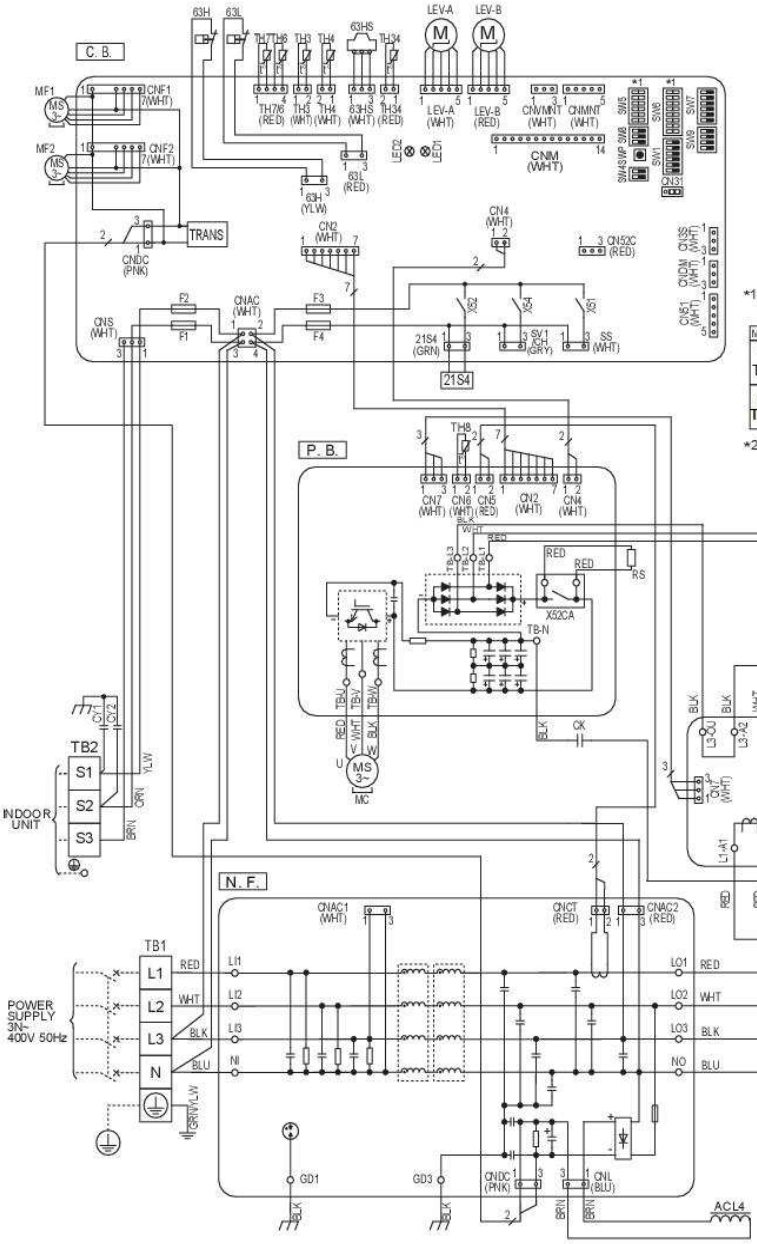

*1 MODEL SELECT

The black square (■) indicates a switch position.

MODEL	SW6	SW5-6*2
11 TR-2	ON OFF 1 2 3 4 5 6 7 8	ON OFF 1 2 3 4 5 6
16 TR-2	ON OFF 1 2 3 4 5 6 7 8	ON OFF 1 2 3 4 5 6

*2 SW5 -1 to 5 : Function Switch

AWHP 22 TR PUHZ-RP200YKA AWHP 27 TR PUHZ-RP250YKA

SYMBOL	NAME	SYMBOL	NAME	SYMBOL	NAME
TB1	Terminal Block<Power Supply>	P.B.	Power Circuit Board	SW7	Switch<Function Setup>
TB2	Terminal Block<Indoor/Outdoor>	SC-U/V/W	Connection Terminal<U/V/W-Phase>	SW8	Switch<Function Setup>
MC	Motor for Compressor	TB-L1/L2/L3	Connection Terminal<L1/L2/L3-Power supply>	SW9	Switch
MF1,MF2	Fan Motor	TB-P1	Connection Terminal	SWP	Switch<Pump Down>
21S4	Solenoid Valve (Four-Way Valve)	TB-P2	Connection Terminal	CN31	Connector<Emergency Operation>
63H,63H1,63H2	High Pressure Switch	TB-C1	Connection Terminal	LED1,LED2	LED<Operation Inspection Indicators>
TH3	Thermistor<Outdoor Pipe>	TB-N1	Connection Terminal	F3,F4	Fuse< T6.3AL250V>
TH4	Thermistor<Discharge>	X52A	52C Relay	SS	Connector<Connection for Option>
TH6	Thermistor<Outdoor 2-Phase Pipe>	N.F.	Noise Filter Circuit Board	CNM	Connector<A-Control Service Inspection Kit>
TH7	Thermistor<Outdoor>	LI1/LI2/LI3/NI	Connection Terminal<L1/L2/L3/NI-Power supply>	CNMNT	Connector<Connected to Optional M-NET Adapter Board>
TH32	Thermistor<Shell>	LO1/LO2/LO3	Connection Terminal<L1/L2/L3-Power supply>	CNVMNT	Connector<Connected to Optional M-NET Adapter Board>
LEV-A,LEV-B	Electronic Expansion Valve	GD1,GD2	Connection Terminal<Ground>	CNDM	Connector< Connected for Option (Contact Input)>
ACL4	Reactor	C.B.	Controller Circuit Board	CN3S	Connector<Connection for Option>
DCL	Reactor	SW1	Switch<Forced Defrost, Defect History Record Reset, Refrigerant Address>	CN51	Connector<Connection for Option>
CB1,CB2	Main Smoothing Capacitor	SW4	Switch<Test Operation>	X51,X52	Relay
RS	Rush Current Protect Resistor	SW5	Switch<Function Switch>		
FUSE1, FUSE2	Fuse<T15AL250V>	SW6	Switch<Model Select>		
CY1,CY2	Capacitor				

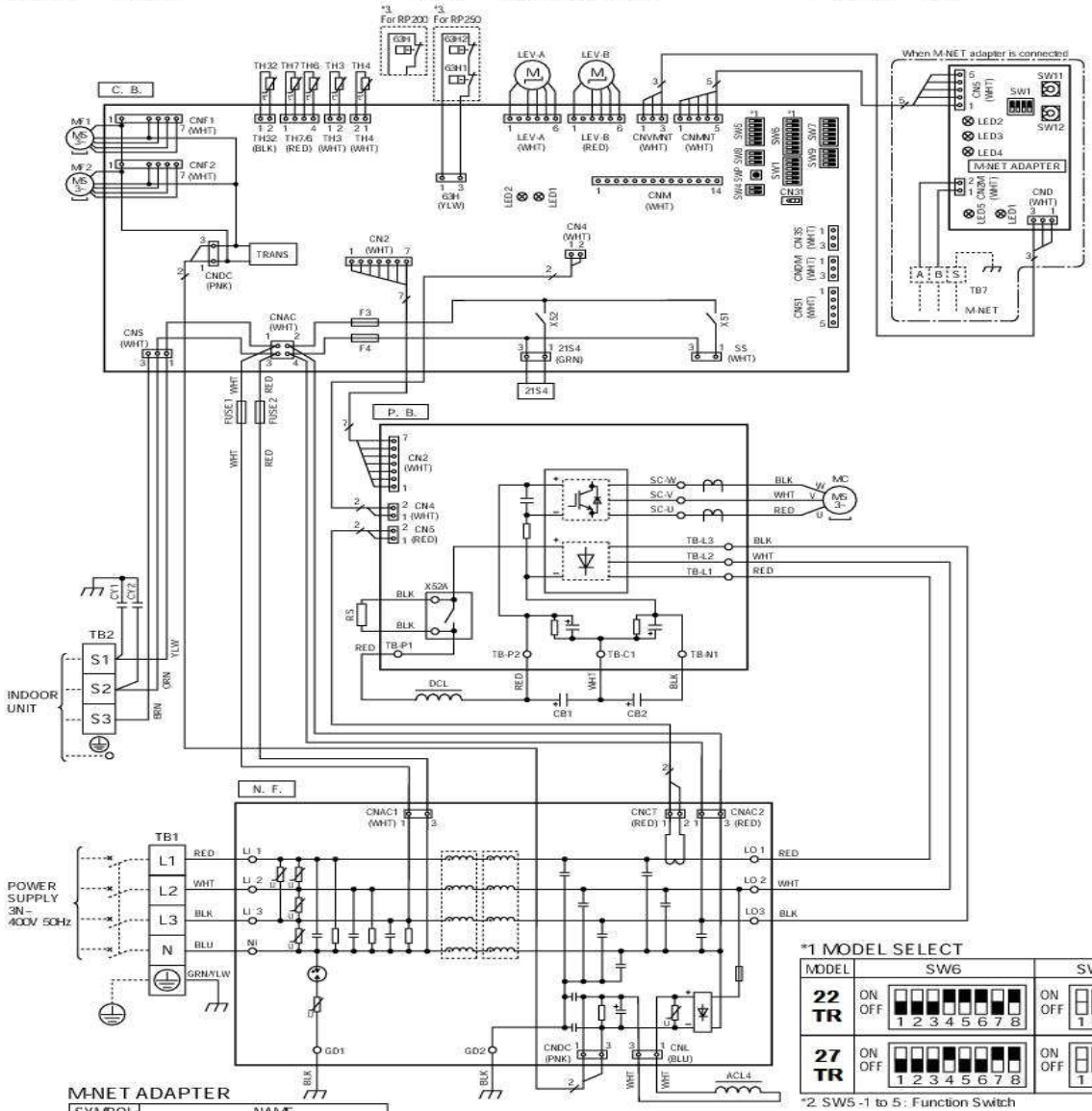

*1 MODEL SELECT

MODEL	SW6	SW5-6 *2
22 TR	ON OFF 1 2 3 4 5 6 7 8	ON OFF 1 2 3 4 5 6
27 TR	ON OFF 1 2 3 4 5 6 7 8	ON OFF 1 2 3 4 5 6

*2 SW5 -1 to 5 : Function Switch

M-NET ADAPTER

SYMBOL	NAME
TB7	Terminal Block(M-NET connection)
CN5	Connector<Transmission>
CND	Connector<Power Supply>
CN2M	Connector<M-NET communication>
SW1	Switch<Status of communication>
SW11	Switch<Address setting:1s digit>
SW12	Switch<Address setting:10s digit>
LED1	LED<Power Supply:DC5V>
LED2	LED<Connection to Outdoor Unit>
LED3	LED<Transmission:Sending>
LED4	LED<Transmission:Receiving>
LED5	LED<Power Supply:DC12V>

AWHP 22 TR - 2 **AWHP 27 TR - 2**

PUHZ-SW160YKA.UK PUHZ-SW200YKA.UK

SYMBOL	NAME	SYMBOL	NAME	SYMBOL	NAME
TB1	Terminal Block <Power Supply>	CY1, CY2	Capacitor	SW8	Switch <Function Switch>
TB2	Terminal Block <Indoor/Outdoor>	P.B.	Power Circuit Board	SW9	Switch <Function Switch>
MC	Motor for Compressor	TB-U/V/W	Connection Terminal <U/V/W-Phase>	SWP	Switch <Pump Down>
MF1, MF2	Fan Motor	TB-L1/L2/L3	Connection Terminal <L1/L2/L3-Power Supply>	CN31	Connector <Emergency Operation>
21S4	Solenoid Valve (Four-Way Valve)	TB-P1/P3	Connection Terminal	CN3S	Connector <Connection for Option>
63H	High Pressure Switch	X52CA/B	52C Relay	CNDM	Connector <Connection for Option>
63HS	High Pressure Sensor	N.F.	Noise Filter Circuit Board	CN51	Connector <Connection for Option>
TH3	Thermistor <Liquid>	LI1/LI2/LI3/NI	Connection Terminal <L1/L2/L3/N-Power Supply>	SV1	Connector <Connection for Option>
TH6	Thermistor <2-Phase Pipe>	LO1/LO2/LO3	Connection Terminal <L1/L2/L3-Power Supply>	SS	Connector <Connection for Option>
TH7	Thermistor <Ambient>	GD1, GD2	Connection Terminal <Ground>	CNM	Connector <Connection for Option>
TH8	Thermistor <Heat Sink>	C.B.	Controller Circuit Board	LED1, LED2	LED <Operation Inspection Indicators>
TH32	Thermistor <Comp. Surface>	SW1	Switch <Manual Defrost, Defect History, Record Reset, Refrigerant Address>	F3, F4	Fuse <T6.3AL250V>
LEV-A	Linear Expansion Valve			X51, X52, X54	Relay
ACL4	Reactor	SW4	Switch <Test Operation>		
DCL	Reactor	SW5	Switch <Function Switch, Model Select>		
RS	Rush Current Protect Resistor	SW6	Switch <Model Select>		
FUSE1, FUSE2	Fuse <T15AL250V>	SW7	Switch <Function Switch>		

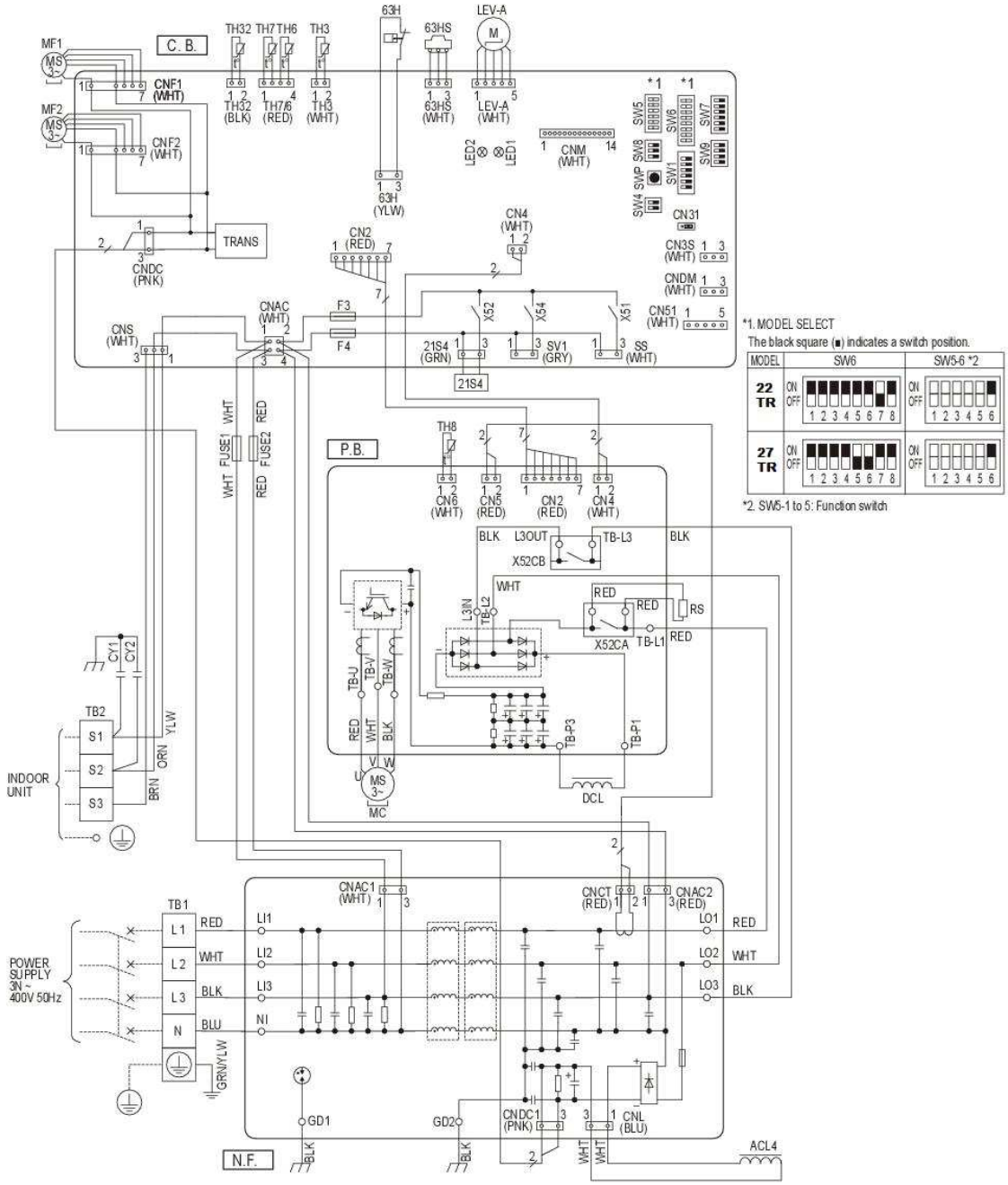

LANG Mickaël 24/01/2019